TSURUMI PUMP

MODEL THP-4070HA

PARTS LIST		CONTRACTOR PUMP				3/25/2013
ITEM	PART No.	DESCRIPTION	QTY	SIZE	MATERIAL	NOTES
1	502-001	CASING	1		AC	
2	511-004	CASING COVER	1		AC	
3	511-009Z	IMPELLER	1		AC	
4	511-011Z	INNER CASING	1		AC	
5	411-019	DISCHARGE BEND	1		AC	NPSH (straight hose pipe) connections
6	501-020	PACKING,BEND	1		NBR	
7	411-013A	VALVE CASE	1			
8	501-015	CHECK VALVE	1		NBR + SPC	
9	411-041	NIPPLE	1			
7+9	411-013	VALVE CASE W/NIPPLE	-1		AC / RESIN	
10	501-012	PACKING,INNER CASING	1		NBR	
11	521-008	MECHANICAL SEAL	1		SIC	
12	502-002	PACKING,CASING	1		NBR	
13	501-022	O-RING(P-24)	2		NBR	
14	501-021	PLUG ASSY	2		RESIN / NBR	
15	401-016	COUPLING HANDLE (1.5)"	1			
16	411-054	HANDLE CAP (1.5)"	1		RESIN	
17	411-053	PACKING,CAP (1.5)"	1		NBR	
18	251-016	COUPLING HANDLE (1)"	2		RESIN	
19	411-051	HANDLE CAP (1)"	2		SWCH	
20	411-052	PACKING,CAP (1)"	2		NBR	
21	411-055	CHAIN	3		SWCH	
22	411-050	SPLIT PIN	3		SWCH	
23	411-056	JOINT RING	1		SWCH	
24	501-014	HEX.BOLT (M8x25 P=2)	15		SWCH	
25	801-014	HEX.BOLT(M8x30 P=2)	2		SWCH	
26	501-005 501-008	CASING BOLT ASSY	4		SWCH	
27	411-058H	HEX.SOCKET BOLT(M8x35)	1		SUS	
28	411-057	SEAL WASHER (W8-S1)	1			
29	531-051	KEY 5x5x7	1			
30	411-030V	FRAME (BLACK)	1		SPC	
31	411-038	BRACKET	1		SPC	
32	1001-032	ANTI-VIBRATION RUBBER (PUMP)	1			
33	501-037	ANTI-VIBRATION RUBBER (ENGINE)	2			
34	501-024	FLANGE NUT M8	6		SWCH	

* Indicates items included in set

TSURUMI PUMP

MODEL THP-4070HA

PARTS LIST		CONTRACTOR PUMP				3/25/2013
ITEM	PART No.	DESCRIPTION	QTY	SIZE	MATERIAL	NOTES

THP-4070HA

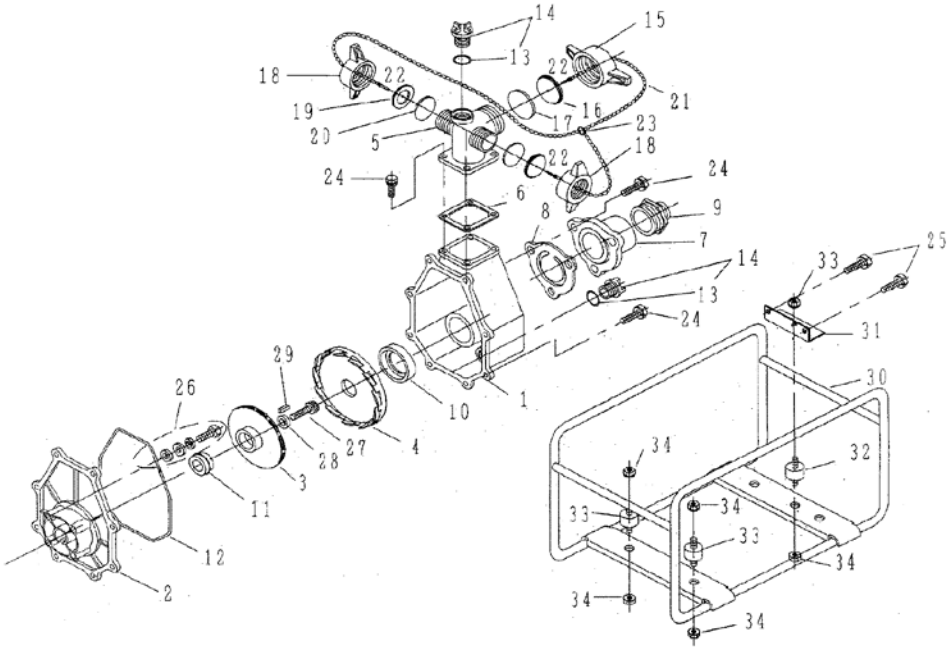

* Indicates items included in set